# HS12864-20 (128x64 DOTS) 1/32DUTY, 1/6BIAS

## 1.DIMENSION OUTLINE

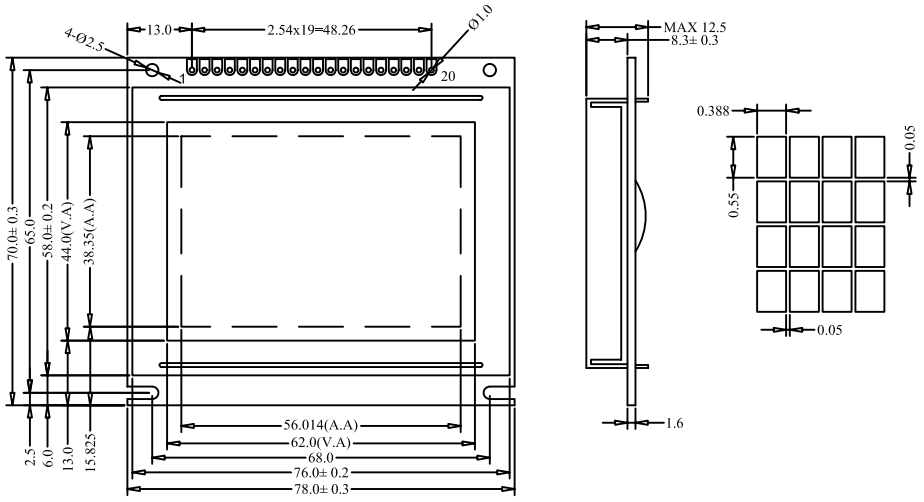


## 2.MECHANICAL SPECIFICATIONS

| ITEM | SPECIFICATIONS | ITEM | REMARK |
|---|---|---|---|
| Modeule Size(L×W×H) | 78.0×70.0×12.5 | mm | Reference Dimensional Outline |
| View Area(W×H) | 62.0×44.0 | mm | |
| Effective V/Area | 56.2014×38.35 | mm | |
| Number of Characters | 128×64 | - | |
| Dot Pitch(W×H) | 0.438×0.60 | mm | |
| Dot Size(W×H) | 0.388×0.55 | mm | |
| Weight (Reflective/Led) | - | g | |

## 3.ABSOLUTE MAXIMUM RATINGS

| ITEM | SYMBOL | CONDITION | STANDARD | |
|---|---|---|---|---|
| | | | MIN | MAX |
| Logic Voltage | $V_{DD}$ | Ta=25℃ | -0.3V | 7V |
| LCD Voltage | $V_{LCD}$ | | -0.3V | 17.5V |
| Input Voltage | $V_I$ | | -0.3V | $V_{DD}$+0.3V |
| Operation Temperature | $T_{OP}$ | — | -20℃ | 70℃ |
| Storage Temperature | $T_{St}$ | — | -30℃ | 80℃ |

## 4.BLOCK DIAGRAMMECHANICAL

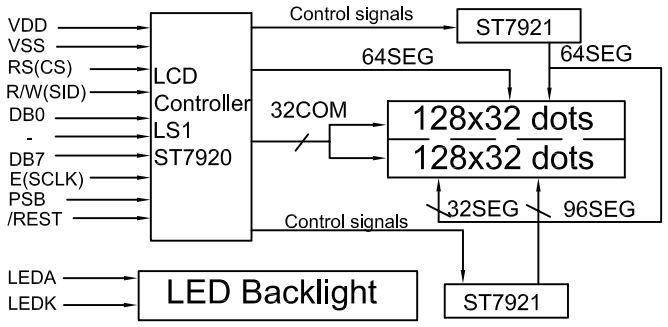


## 5.LED BACKLIGHT SPECIFICATIONS

| ITEM | SYMBOL | TYPE | MAX | UNIT |
|---|---|---|---|---|
| Ta=25℃ | | | | |
| Forward Voltage | $V_f$ | 4.1 | 4.3 | V |
| Forward Current | $I_f$ | 440 | — | mA |
| Emission Vave Length | $\lambda_P$ | 568 | — | nm |

## 6.INTERFACE PIN CONNECTIONS

| ITEM | SYMBOL | LEVEL | FUNCTIONS |
|---|---|---|---|
| 1 | VSS | 0V | Power Ground |
| 2 | VDD | +5V | Power supply for logic |
| 3 | V0 | — | Contrast adjust |
| 4 | RS/(CS) | H/L | Register selection for parallel mode /chip enable for serial mode |
| 5 | RW/(SID) | H/L | L:write H:read/serial data input |
| 6 | E/(SCLK) | H.H→L | Enable singnal/Serial clock |
| 7-14 | DB0-DB7 | H/L | Data Bus |
| 15 | PSB | H/L | H:Parallel mode L:Serial mode |
| 16 | NC | — | No Connection |
| 17 | /REST | L | Reset signal |
| 18 | NC | — | No Connection |
| 19 | LEDA | +5V | Power supply for LED backlight |
| 20 | LEDK | 0V | |

## 7.ELECTRICAL CHARACTERISTICS

| ITEM | SYMBOL | MIN | TYPE | MAX | UNIT |
|---|---|---|---|---|---|
| Ta=25℃ | | | | | |
| Logic Power | $V_{DD}$ | 4.5 | 5 | 5.5 | V |
| Input High Voltage | $V_{IH}$ | 0.7VDD | — | $V_{DD}$ | V |
| Input Low Voltage | $V_{IL}$ | -0.3 | — | 0.6 | V |
| Output High Voltage | $V_{OH}$ | 0.8VDD | — | VDD | V |
| Output Low Voltage | $V_{OL}$ | 0 | — | 0.4 | V |
| Logic Current | $I_{DD}$ | — | 3 | 5 | mA |
| Operation Voltage For LCD | $V_{DD}$-$V_O$ | — | 5 | — | V |