HS320240A1(320X240 DOTS) 1/240DUTY, 1/14BIAS

1.DIMENSION OUTLINE

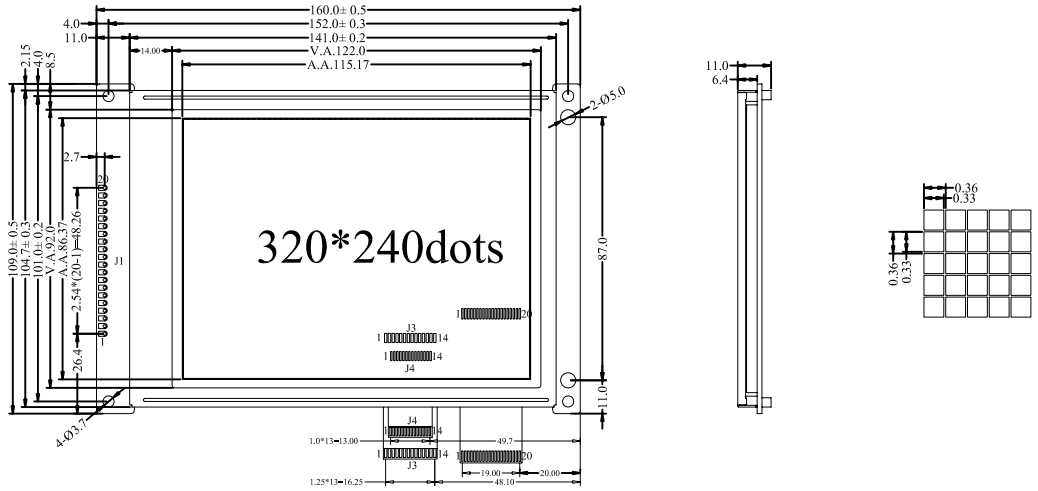

2.MECHANICAL SPECIFICATIONS

ITEM	SPECIFICATIONS	ITEM	REMARK
Module Size(L×W×H)	160.0×109.0×11.0	mm	Reference Dimensional Outline
View Area(W×H)	122.0×92.0	mm	
Effective V/Area	115.17×86.37	mm	
Number of Characters	320×240	-	
Dot Pitch(W×H)	0.36×0.36	mm	
Dot Size(W×H)	0.33×0.33	mm	

3.ABSOLUTE MAXIMUM RATINGS

ITEM	SYMBOL	CONDITION	STANDARD	
			MIN	MAX
Logic Voltage	V_{DD}	Ta=25℃	-0.3V	7V
LCD Voltage	V_{LCD}		-0.3V	25V
Input Voltage	V_I		-0.3V	V_{DD}+0.3V
Operation Temperature	T_{OP}	—	-20℃	70℃
Storage Temperature	T_{St}	—	-30℃	80℃

4.BLOCK DIAGRAM MECHANICAL

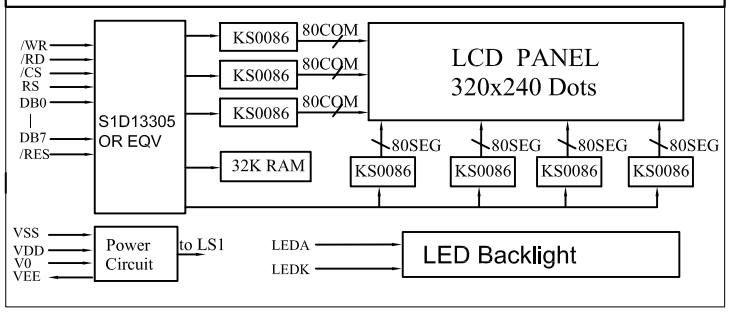

5.LED BACKLIGHT SPECIFICATIONS

ITEM	SYMBOL	TYPE	MAX	UNIT
Ta=25℃				
Forward Voltage	V_f	3.0	3.1	V
Forward Current	I_f	150	—	mA
Emission Vave Length	λ_P	White	—	nm

7.ELECTRICAL CHARACTERISTICS

ITEM	SYMBOL	MIN	TYPE	MAX	UNIT
Ta=25℃					
Logic Power	V_{DD}	4.5	5	5.5	V
Input High Voltage	V_{IH}	V_{DD}-2.2	—	V_{DD}	V
Input Low Voltage	V_{IL}	0	—	0.8	V
Output High Voltage	V_{OH}	V_{DD}-0.3	—	V_{DD}	V
Output Low Voltage	V_{OL}	0	—	0.3	V
Logic Current	I_{DD}	—	—	170	mA
Operation Voltage For LCD	V_{DD}-V_0	—	23	—	V

6.INTERFACE PIN CONNECTIONS

ITEM J1	ITEM J2	SYMBOL	LEVEL	FUNCTIONS (internal Controller)
1	1	VSS	0V	Power Ground
2	2	VDD	+5V	Power supply for logic
3	3	V0	—	Contrast adjust
4	5	/WR	L	Write signal
5	6	/RD	L	Read signal
6	15	/CS	L	Chip enable signal
7	4	RS	H/L	H:command L:data
8	16	/REST	L	Reset signal
9-16	7-14	DB0-DB7	H/L	Data Bus
17,19	19	LEDA	+5V	Backlight Anode
18	17	VEE	—	Output voltage for LCD driving
20	20	LEDK	0V	Backlight Cathode
	18	SEL1	H/L	H:68 interface L:80 interface

ITEM (J3-J4)	SYMBOL	LEVEL	FUNCTIONS (external Controller)
1-4	D0-D3	H/L	Display Data Bus
5	DIS.O	H/L	Display ON/OFF
6	FLM	H/L	Scan Start Line
7	M	H/L	Frame Signal
8	LP	H/L	Data Latch Clock
9	CP	H/L	Data Shift Clock
10	VDD	+5V	Power supply for logic
11	VSS	0V	Power Ground
12	VEE	—	Output voltage for LCD driving
13	V0	—	Contrast adjust
14	FG	0V	Frame Ground